DO NOT SCALE - IF IN DOUBT ASK

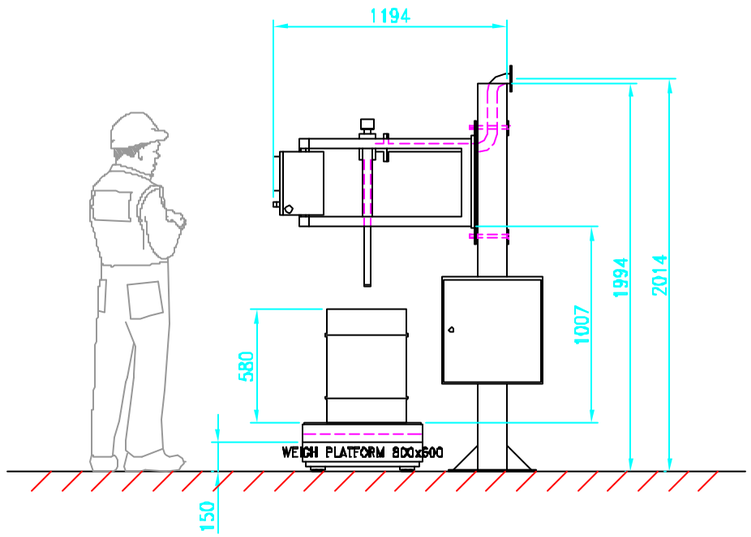

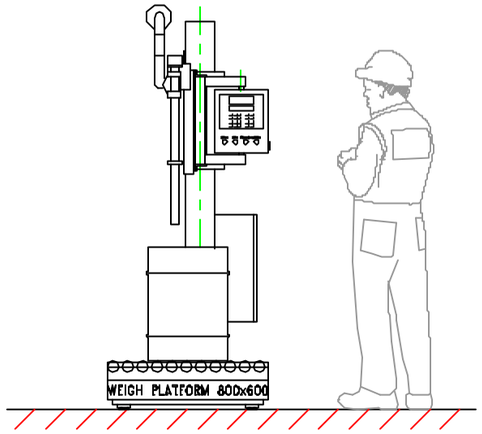

FOR ILLUSTRATION PURPOSES ONLY

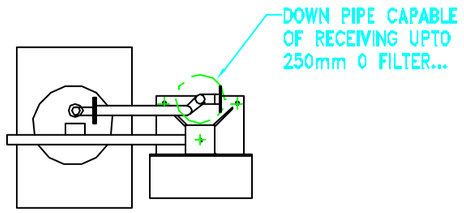

REV		BY	DATE
A	ORIGINAL ISSUE	GW	10/06/03

KANON LIQUID HANDLING
Tel: +44 (0) 1530 263000
Fax: +44 (0) 1530 264222
E-Mail: info@kanon.uk.com
Web: www.kanon.uk.com
Suite 4 Brookside House Business Centre
Spring Road Ibstock Leicestershire LE67 6LR

DRG TITLE: General Arrangement For Single Drum Top Filling Machine

CLIENT: -

PROJECT: Standard Drawings

DRAWN: GW

CHECKED: PK

DATE: 10/06/03

SCALE: N.T.S.

ALL DIMENSIONS IN mm U.O.S.

IMPORTANT: This drawing has been prepared by and is the copyright of Kanon Liquid Handling. It must not be copied or reproduced without the written consent of Kanon Liquid Handling. Drawing size = A3.

DRG No. STD022

REV A