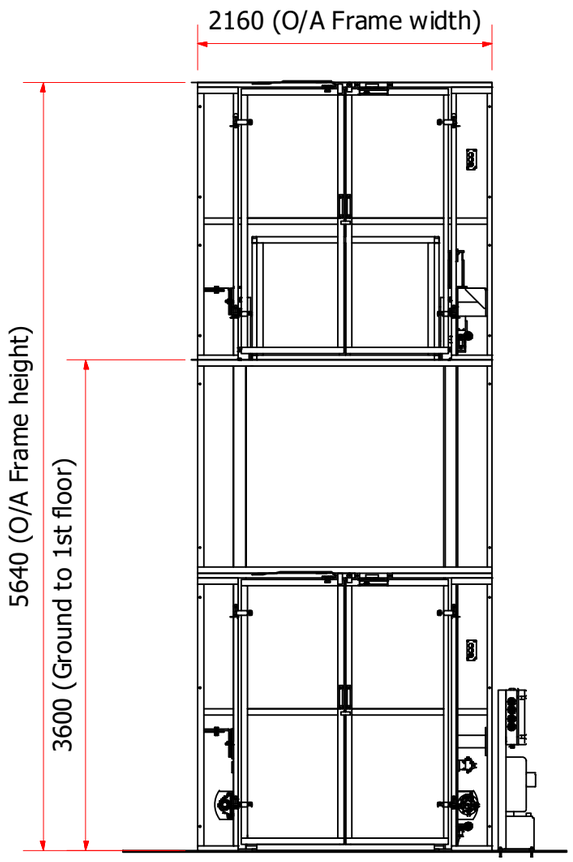

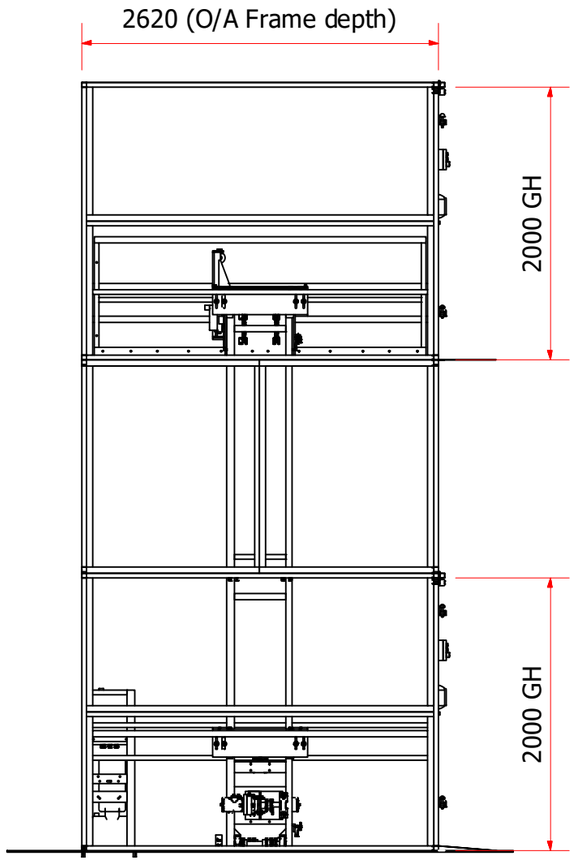

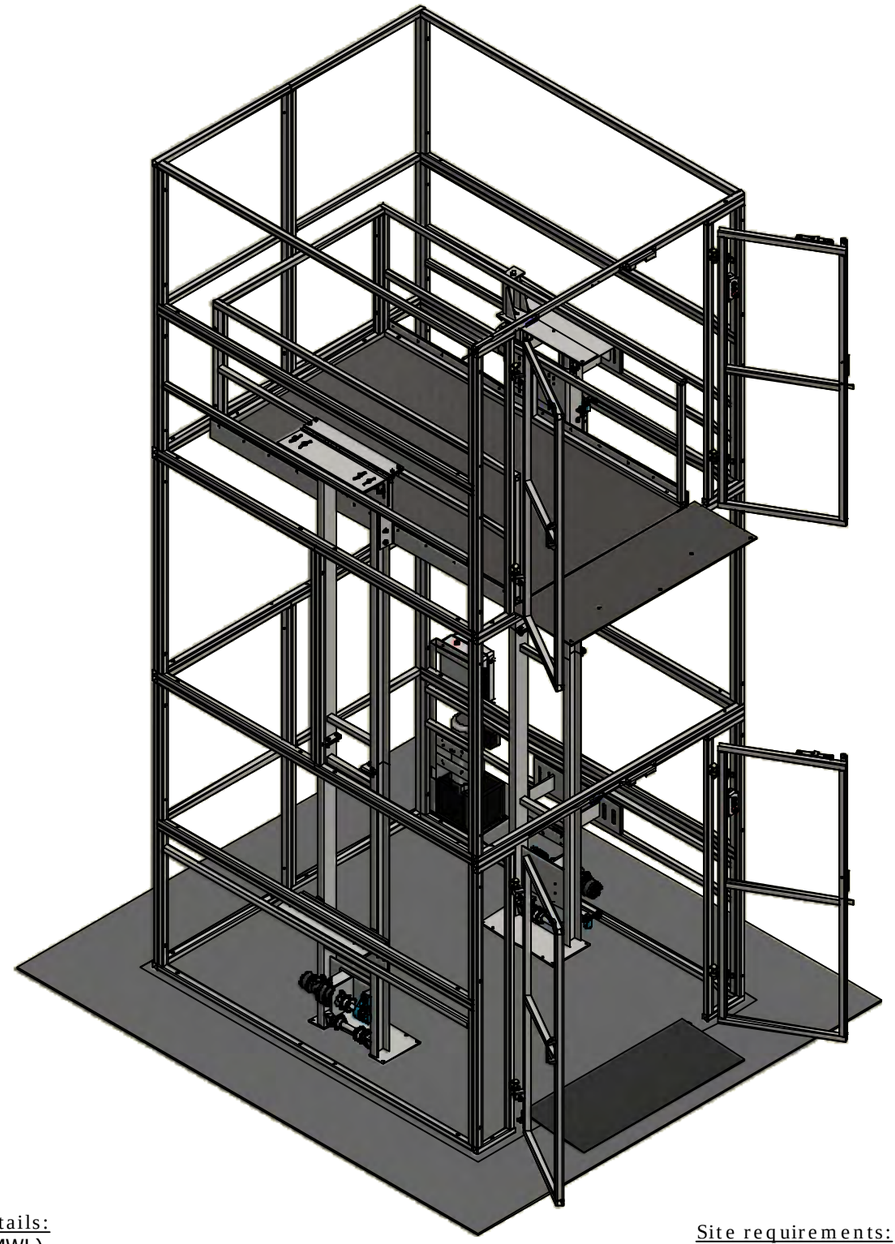

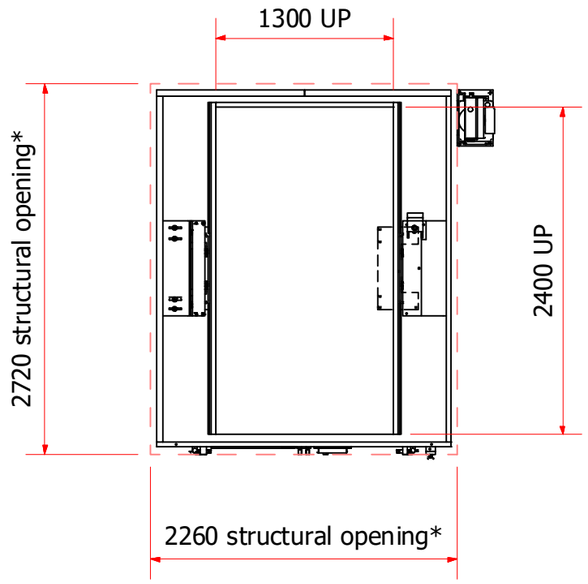

Power pack stand detail

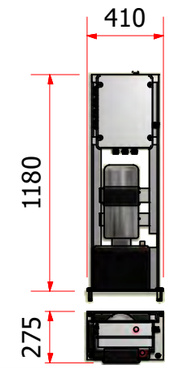

Site requirements:
FALL ARREST REQUIRED

MezzLift details:
- 400 kg (MWL)
- No. of stops: 2
- Ground to 1st floor height: 3600 (inc sump)
- 1st to 2nd floor height: 0 mm
- Usable platform size: 1300 (w) x 2400 (d)
- Guarding 900 high on non-loading edges of the platform
- Gate locking system: Electrically Interlocked
- Hold to run, push button controls at both levels
- Floor mounted, no pit required
- Self-supporting mesh shaft
- Finish - Black spray finish

Electrical supply requirements
415 V, 2.2 kW, Three phase and Neutral supply terminated in a double pole isolator at lower level

GH = Gate height
DH = Dock height
UP = Usable platform
* Minimum structural opening / sump size if required

UNLESS STATED OTHERWISE, GENERAL TOLERANCES TO ISO 2768 TOLERANCE CLASS 'm' FOR MACHINING & 'V' FOR FABRICATION				Customer Ref.	PH Job Number
Drawn By:	Checked By:	Finish: Black spray finish	Quantity	Date: 15/03/2016	Design State: WorkInProgress
Title: GT Motorcycles (2012) LTD, Devon Mezz Pro - 400 kg General Arrangement - Layout			Approved by		Dimensions: mm Scale on A3: 1:45 Projection
Manual Handling Solutions, 58, Paige Close, Watlington, Kings Lynn, Norfolk PE33 0TQ, Tel 01553 811977, sales@manualhandlingsolutions.co.uk		Drg No.: 86588_MEZZi_GF_MASTER.iam		Edition: A	Sheet Number: 2 of 24
		Part No: 86588_MEZZi_GF_MASTER	Reference: 86588		