PROJECTION

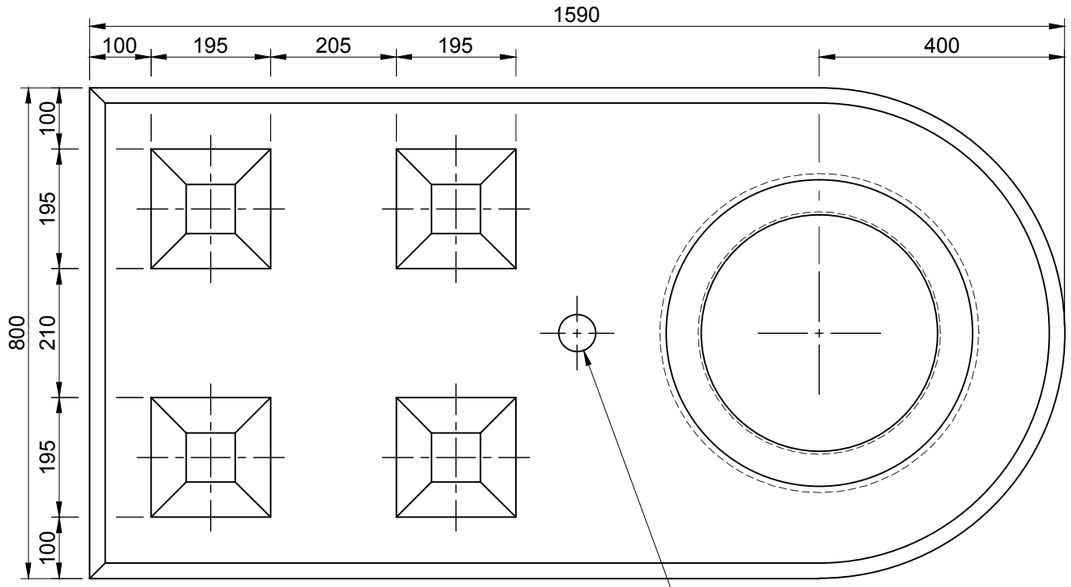

Plan

Ø60mm Dia Semi-Spherical Recess in Gravitational Centre of Block for 'Deha' type Lifting Pin (n.b. Lifting Pin 180mm Long). (Lifting Pin is rated to 5.0 tonnes with a safety factor of 3).

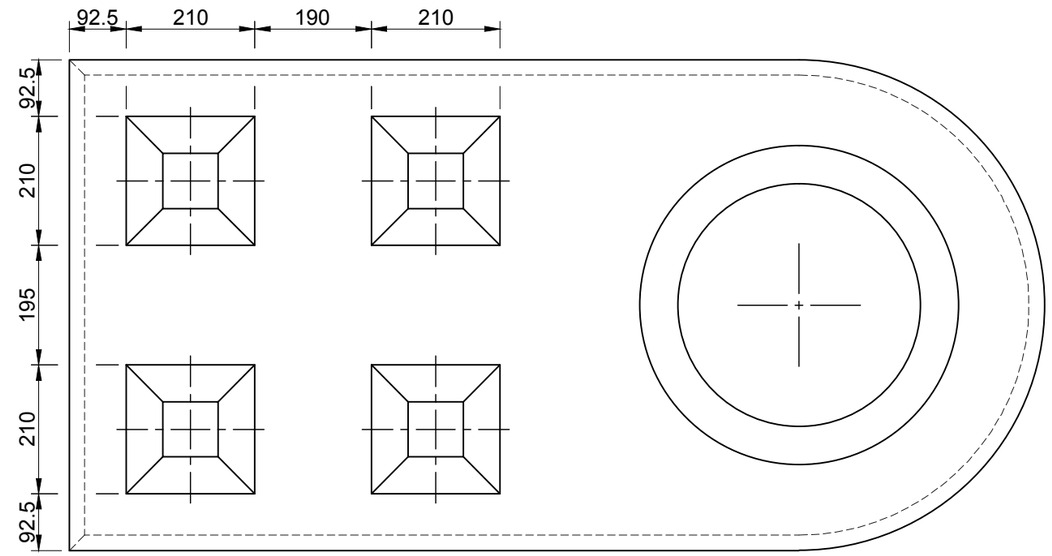

Section on Arrow A - A

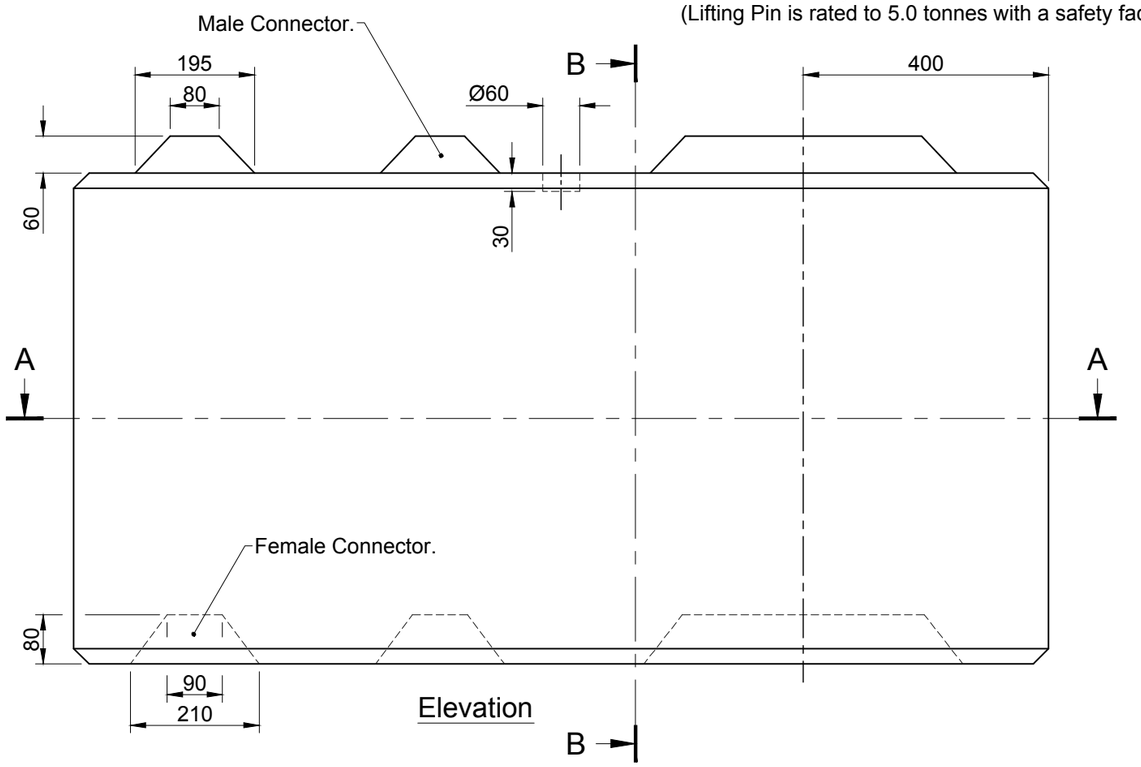

Elevation

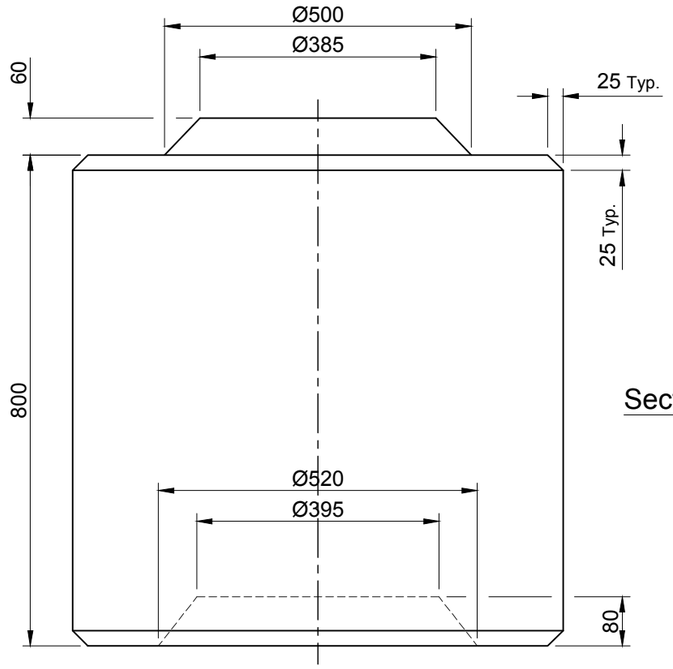

Section on Arrow B - B

Total Block Weight : 2240Kg

Note :
Some details omitted for clarity.

REV	DATE	REASON FOR ISSUE	DRN	APP	REV	DATE	REASON FOR ISSUE	DRN	APP
					O	09.01.15	For Information	CTC	RD

TITLE :
Legato™ Interlocking Bend Block
1590 x 800 x 800mm (M / F Connectors)
Elite Product Code : LG Bendi

ELITE PRECAST CONCRETE LIMITED
HALESFIELD 9, TELFORD
SHROPSHIRE TF7 4QW

ELITE PRECAST CONCRETE

DRN :	CHKD :	DATE :	DRG SIZE :	SCALE:	DRG	REV
CTC	RD	09-01-15	A3	1:10	188	O