PROJECTION

Total Block Weight : 750Kg

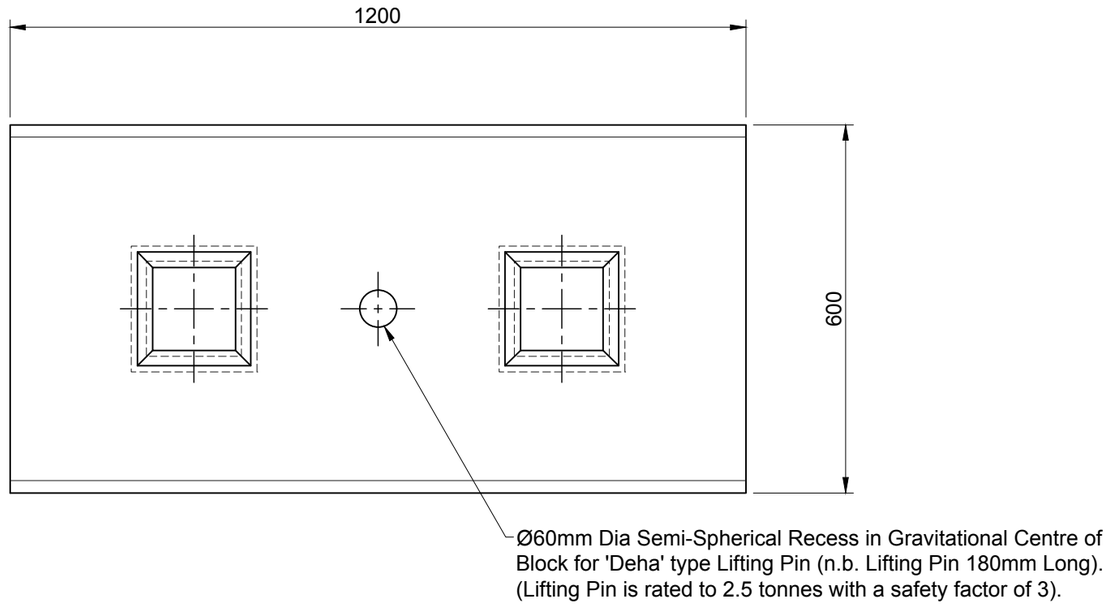

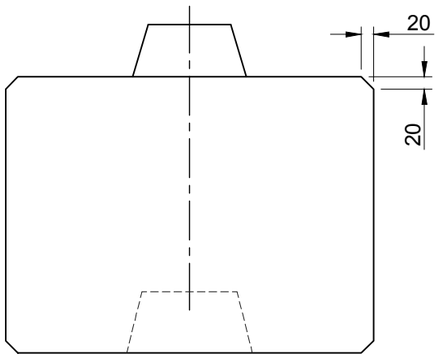

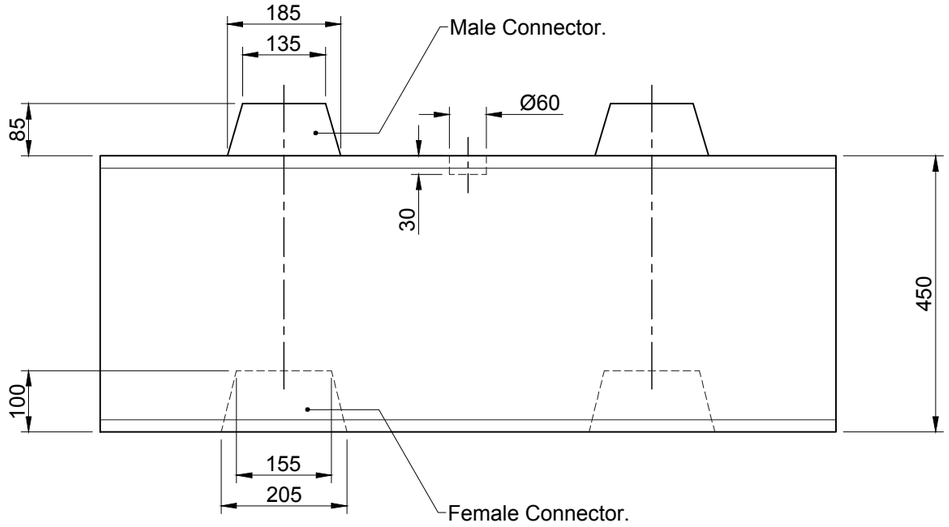

REV	DATE	REASON FOR ISSUE	DRN	APP	REV	DATE	REASON FOR ISSUE	DRN	APP
					O	31.10.13	For Information	CTC	RD

TITLE : Duo™ Interlock Block
1200 x 600 x 450mm
Elite Product Code : BL2 also KL750

ELITE PRECAST CONCRETE LIMITED
HALESFIELD 9, TELFORD
SHROPSHIRE TF7 4QW

DRN :	CHKD :	DATE :	DRG SIZE :	SCALE:	DRG	REV
CTC	RD	31-10-13	A3	1:10	001	O